Victor Model 9–54

AND

VICTOR MODEL 9—56

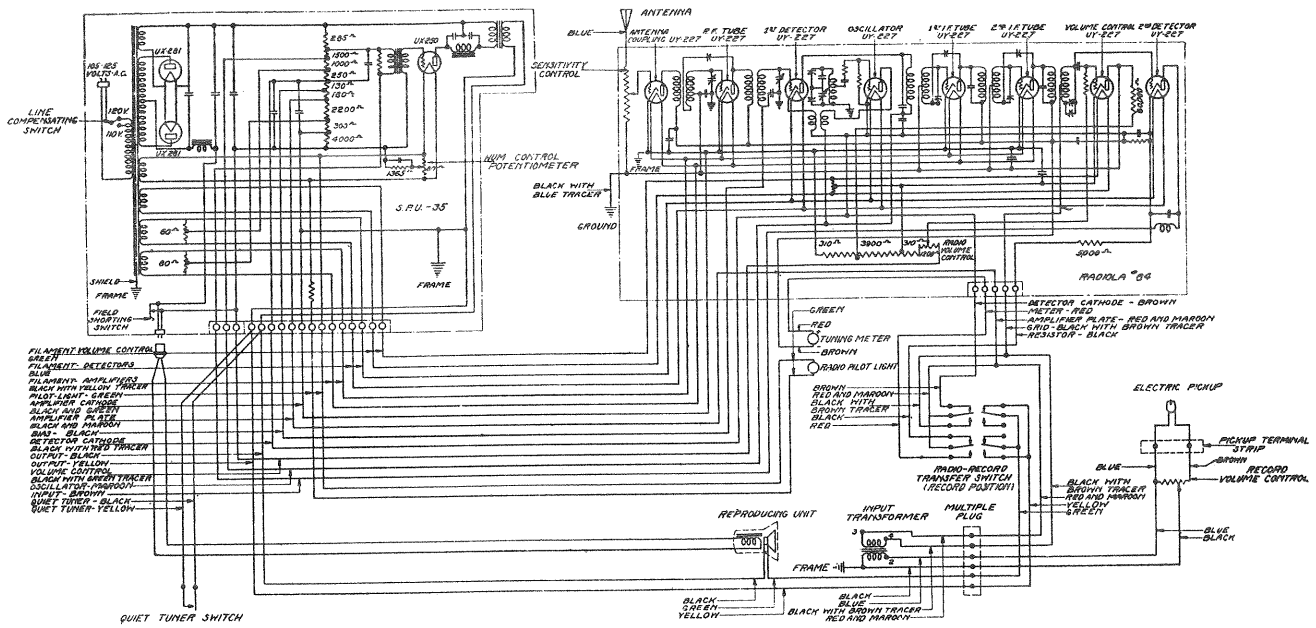

Schematic Wiring Diagram Electrola Radiola 9-54

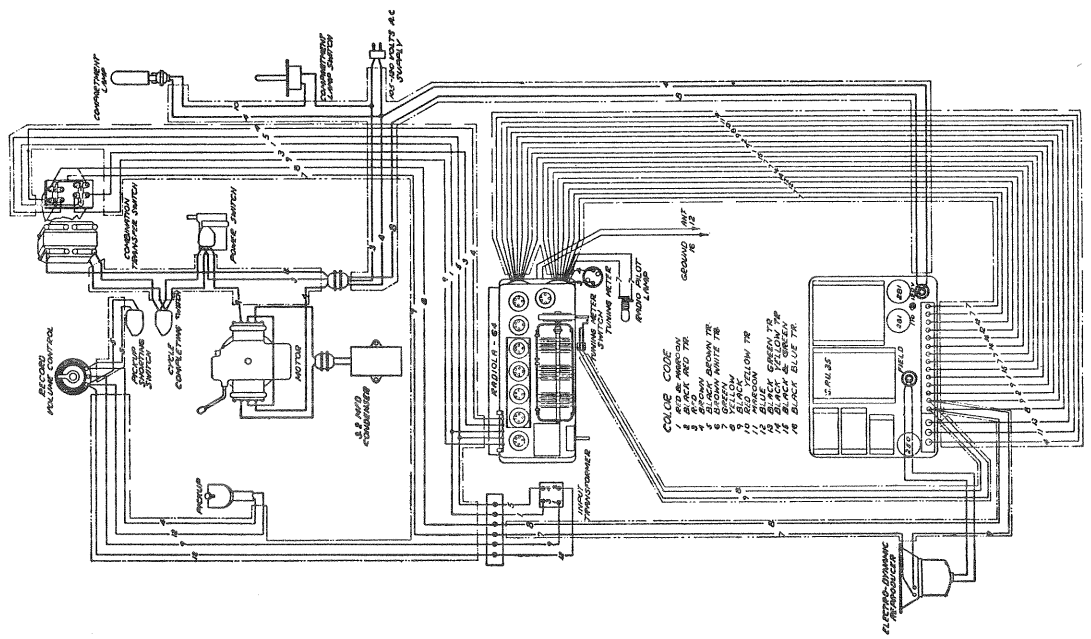

Cable Wiring Diagram Automatic Electrola Radiola 9-54 above Serial No. 6401

SERVICE DATA SAME AS MODEL 9—18