RCA VICTOR MODELS T 4-8A and T 4-9A

SERVICE NOTES

These instruments are similar to Models T 4-8 and T 4-9 except for several circuit modifications. The major differences include:—rearrangement of wave-trap circuit, removal of oscillator low frequency trimmer, replacement of the RCA-6F7 with an RCA-6B7, and reflexing of the i-f stage for additional audio amplification. The intermediate frequency remains at **460 kc.** The antenna and oscillator coils are to be aligned only at **1400 kc.** Refer to T 4-8 and T 4-9. Service Notes for loudspeaker data, power ratings and specifications.

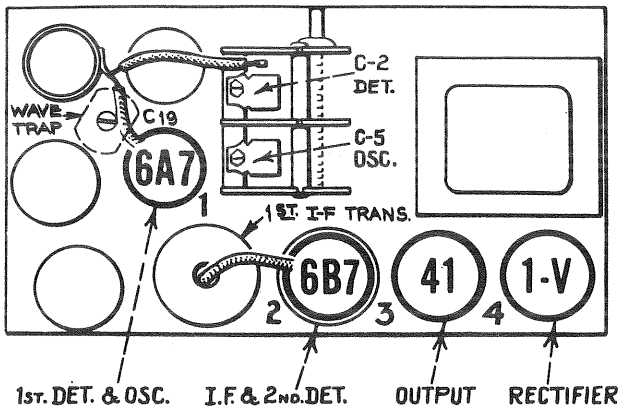

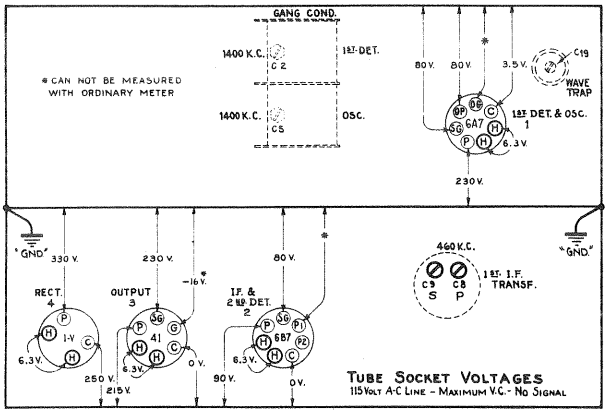

REPLACEMENT PARTS

Insist on genuine factory tested parts, which are readily identified and may be purchased from authorized dealers

Stock No.	Description	List Price
	Receiver Assemblies	
4244	Cap—Grid contact cap—Package of 5...	$ 0.20
6956	Cap—Second detector Radiotron shield cap	.15
4246	Capacitor—80 mmfd. (C3)	.24
5116	Capacitor—175 mmfd. (C10)	.18
11500	Capacitor—175 mmfd. (C11)	.18
3784	Capacitor—900 mmfd. (C12)	.30
5107	Capacitor—.0025 mfd. (C13, C17)	.16
4868	Capacitor—.005 mfd. (C14)	.20
4836	Capacitor—.05 mfd. (C4)	.30
4841	Capacitor—0.1 mfd. (C18)	.22
11497	Capacitor—8 mfd. (C16)	1.04
11240	Capacitor—10 mfd. (C15)	1.08
11661	Coil—Antenna coil (L1, L2)	.52
11662	Coil—Oscillator coil (L3, L4)	.56
11660	Condenser—Two gang variable tuning condenser (C1, C2, C5, C6)	2.50
11659	Dial—Station selector dial	.35
11670	Resistor—330 ohms—carbon type—1 watt (R8)—Package of 5	1.10
11671	Resistor—18,000 ohms—carbon type—2 watts (R9)	.22
11669	Resistor—33,000 ohms—carbon type—1 watt (R5)—Package of 5	1.10
5029	Resistor—56,000 ohms—carbon type—1/4 watt (R1)—Package of 5	1.00
5158	Resistor—220,000 ohms—carbon type—1/4 watt (R4)—Package of 5	1.00
11172	Resistor—470,000 ohms—carbon type—1/4 watt (R6, R10)—Package of 5	1.00
3033	Resistor—1 Megohm—carbon type—1/4 watt (R3)—Package of 5	1.00
11668	Resistor—5.6 Megohms—carbon type—1/4 watt (R7)—Package of 5	1.00
11126	Shield—Oscillator coil shield	.12
3942	Shield—Second detector Radiotron shield	.18
11390	Shield—First intermediate frequency transformer shield	.25
4340	Lamp—Dial lamp—Package of 5	.60
5152	Transformer—First intermediate frequency transformer (L5, L6, C8, C9)	1.68
7955	Transformer—Second intermediate frequency transformer (L7, L8)	.85
11665	Transformer—Power transformer—105-125 volts 25-50 cycles	5.06
11666	Transformer—Power transformer—100-130/140-160/195-250 volts 40-60 cycles	3.80
11664	Transformer—Power transformer—105-125 volts 50-60 cycles—(T1)	3.60
11667	Trap—Wave trap (L11, C19)	1.22
11663	Volume control (R2, S1)	1.20
	Reproducer Assemblies	
11672	Coil—Field coil, magnet and cone support assembly (L10)	3.45
9588	Cone—Reproducer cone (L9)—Package of 5	3.55
5119	Connector—Three-contact female connector for reproducer cable	.25
5118	Connector—Three-contact male connector for reproducer	.25
9630	Reproducer—Complete	5.50
4893	Transformer—Output transformer (T2)	1.48

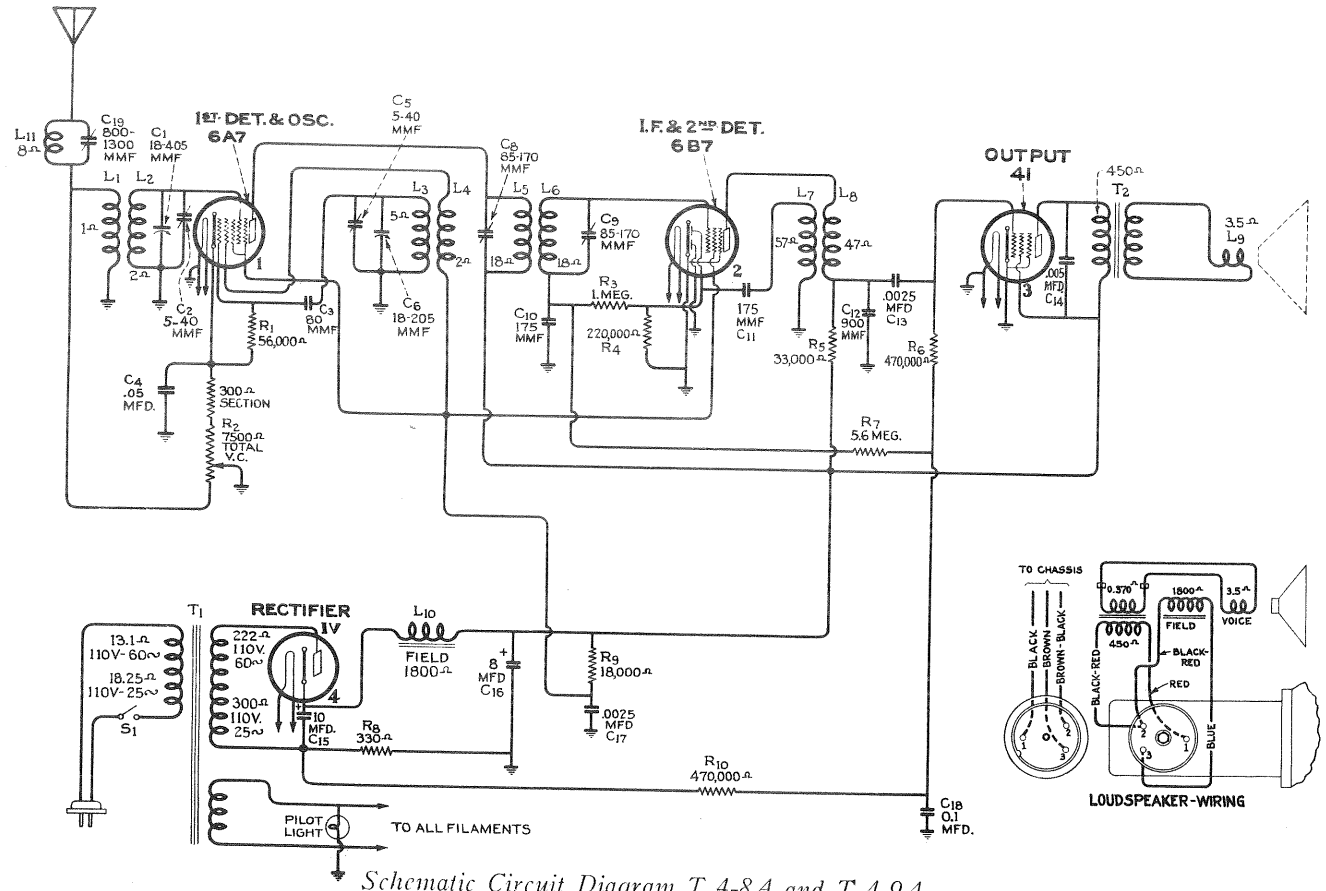

Schematic Circuit Diagram T 4-8A and T 4-9A

C-4 is .01 Mfd. in Some Instruments.

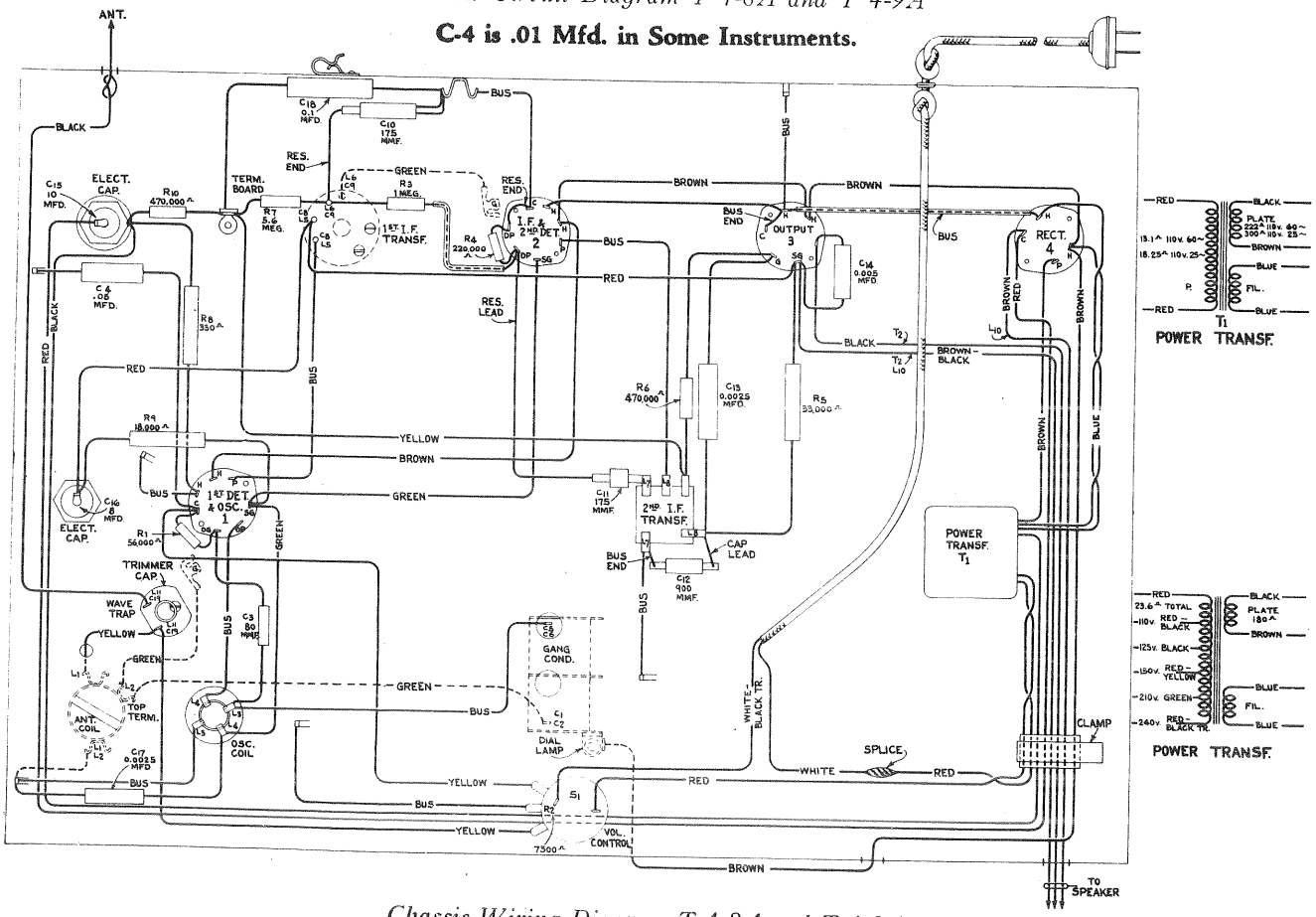

Chassis Wiring Diagram T 4-8A and T 4-9A